# NYLATECH

MEETING TODAY'S CAST NYLON NEEDS

cpetersen@nylatech.com

nmerkt@nylatech.com

# Bearing Design

# WHY USE NYLON?

- Excellent Load Bearing Capacity
  - 15,000 psi at 10% deflection
  - 3500 psi bearing strength
- Corrosion Resistance
- Light Weight
  - 1/8 weight of steel
- Low co-efficient of friction
- Relatively low cost
- Excellent wear resistance
- Reduced wear on mating parts
- Available in many tube sizes
- Near Net Shape capability
- Insulator (good & bad)
- Easy to machine

# OPERATING ENVIRONMENT

- Temperature (from -40 to 275° F)
- Moisture Considerations
- Surface Speed and Load (PV)
- Chemicals

# BEARING DESIGN DIMENSIONS

- Outer Diameter - Press Fit
- Inner Diameter - Running Clearance
  - Shaft Allowance
  - Temperature Factor
  - Moisture Factor
  - Press Fit
- Finished Dimensions

# PRESS FIT

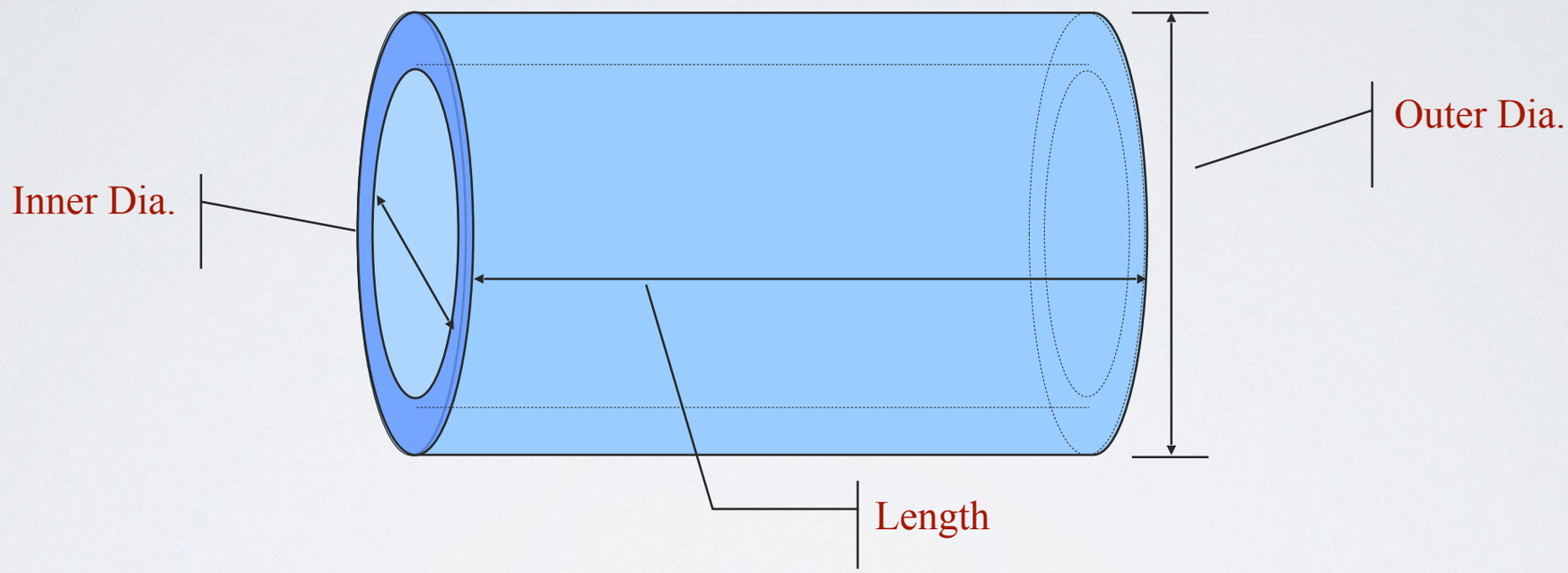


- Bearing should be slightly larger than housing diameter
- Rule of thumb, multiply 0.005 to $\sqrt{\text{Housing Diameter}}$. The bearing should be larger by this amount.
- Example; for a 4 inch housing, the press fit is $0.005 \times \sqrt{4} = 0.010$. The bearing diameter should be machined to 4.010 inches

# RUNNING CLEARANCE

There are **four** components that make up running clearance

- Shaft Allowance
- Operating Temperature
- Moisture Factor
- Press Fit

Note: The single most common reason for nylon bearing failure is inadequate running clearance.

# SHAFT ALLOWANCE

## Shaft Allowance Chart

| Shaft Size (Ds) | 3/4 | 1 | 1 1/4 | 1 1/2 | 1 3/4 | 2 | 2 1/4 | 2 1/2 | 2 3/4 | 3 |
|---|---|---|---|---|---|---|---|---|---|---|
| Shaft Allowance | 0.004 | 0.005 | 0.006 | 0.007 | 0.008 | 0.009 | 0.01 | 0.011 | 0.012 | 0.013 |

Note: For shafts larger than 3", add 0.002" per inch to 0.013". For example, a 5" diameter shaft would need 0.017" shaft allowance.

# OPERATING TEMPERATURE

- Additional running clearance will be required to account for the ambient temperature.
- This additional clearance depends on the nominal wall thickness of the bearing as well as the temperature.

| Ambient temperature (in °F) | Wall Thickness Factor (T) |
|---|---|
| 70° | 0.013 |
| 100° | 0.016 |
| 150° | 0.019 |
| 200° | 0.022 |
| 250° | 0.025 |
| 300° | 0.029 |

To calculate the additional running clearance, reference the ambient temperature and multiply the wall thickness factor to the nominal wall thickness of the bearing.

For example: A 2-1/4" dia housing with 1-1/2" shaft at 250°F would need an additional 0.009" running clearance (0.375" wall * 0.025).

# MOISTURE FACTOR

*For submerged applications, machine bushings to within 0.1" of the finished size and soak in water for 5 days. Then machine to size.*

**Otherwise, use the chart to the right**

| Wall Thickness | Additional Running Clearance |
|---|---|
| 3/16" | 0.018" |
| 1/4" | 0.022" |
| 5/16" | 0.025" |
| 3/8" | 0.027" |
| 1/2" | 0.030" |
| 5/8" | 0.032" |
| 3/4" | 0.033" |
| 1" or Larger | 0.034" |

# ADJUSTED BEARING SIZE

- Bearing OD = Housing ID + Press Fit
  - Example: 2.5" Housing requires a press fit of 0.008 (.005 x $\sqrt{2.5}$). Bearing OD then is 2.508"

- Bearing ID = Shaft OD + Shaft Allowance + temperature factor + moisture factor + Press fit
  - Example: 1.25" shaft operating at 200°F in a 2.5" housing (not submerged). Bearing ID = 1.25" + 0.006 + 0.014 + 0 + 0.008. The Bearing ID is 1.278"

- Tolerances
  - For bearings smaller than 5" OD, the OD tolerance should be +/-0.004 provided that it does not eliminate the press fit. The tolerance on the ID should be +0.005, -0.

# LOAD BEARING CALCULATION OF A BUSHING

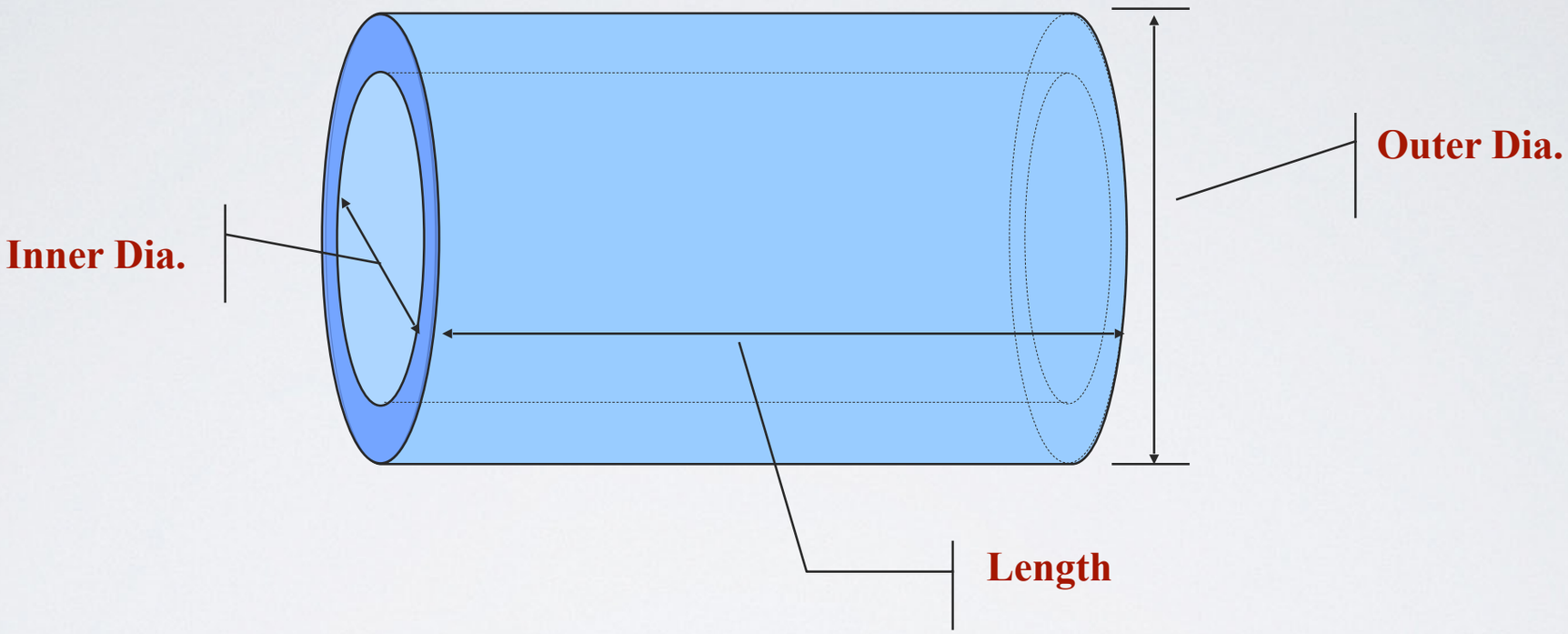


- For busing or bearing applications, use a compressive strength of 3,500 psi
- The Load Bearing capability of the bushing is the contact area multiplied by 3,500 psi
- The contact area is **Inner Diameter** multiplied by the **Length**
  - **Example**: an ID of 1.5" and a length of 4"
  - Contact Area is 1.5" x 4" = 6 square inches
- In our example 6 square inches x 3,500 psi = 21,000 lbs

# PRESSURE VELOCITY (PV) CALCULATION

- **PV is the pressure on the nylon part multiplied by the surface speed**
- **Common units for PV is psi-fpm**
- **Typically Known Information**
  - Load
  - Shaft or part speed in rpm
  - Shaft diameter
  - Contact length

- Example:
  - **Bearing** - 3"long on a 2" dia shaft carrying a 3,000lb load and rotating @ 55 rpm
  - **Pressure: Load ÷ Contact Area**
    - 3,000lbs ÷ 3" (long) x 2" (shaft dia) = 500 psi
  - **Surface Speed** (in fpm)
    - 2" dia shaft @ 55 rpm
    - 2" x π x 55rpm = 345.4 inches per minute
    - 345.4 ÷ 12 (in/ft) = 28.78 fpm
  - **PV** is 500 psi x 28.78 fpm or 14,390 psi-fpm

# LIMITING PV VALUES

- **MD Nylon** is 3,000 psi-fpm
- **Oil Filled** and **MD-Oil** Filled is 5,500 psi-fpm
- **Nylatech SL** is 15,000 psi-fpm
- **Nylatech PVM** is 16,000 psi-fpm

# SUMMARY

- Advantage of Nylatech Bearings
- Environmental Factors
- Press Fit
- Running Clearance
- Bearing Size
- Bearing load calculation
- PV Calculation

QUESTIONS?

cpetersen@nylatech.com

nmerkt@nylatech.com